Smart Lock

User Manual

H15-TB

Special Attention:

1. Mechanical keys please keep outdoor, just in case keys lock in doors.

2. Please replace for the battery when low wattage alarm.

3.Reading this manual carefully before installation, and keep it for future reference.

1. Introduction

1.1.Lock structure

1.2.Packing List

Check the following drawing to check whether the package contains all the parts

NO	Name	Qty		NO.	Name	Qty
1	Front Panel	1		10	Mortise Screws:M4*20mm (For Wooden Door)	5
2	Back Panel	1		11	60mm Square shaft	1
3	Mortise	1		12	80mm Square shaft	1
4	Card	3		13	M5*25mm Screw	2
5	Mechanical Key	2		14	M5*40mm Screw	2
6	Waterproof Rubber Plate	2		15	User Manual	1
7	Screw Stubs:M5*35mm	2		16	U-Clip	1
8	Strike&Strike Box	1+1		17	M3*10mm Panel screws	4
9	Sliding Screws:M5*11mm	1				

1.3.Specifications

Suitable for Models	H15-TB	Doors Applicable	Aluminum door Wooden door
Materials	Aluminum alloy	Working Voltage	6V/4x AA Batteries
Lock Weight	2 KG	Door Thickness to Fit	35-65mm
Unlocking Way	Bluetooth Fingerprint(option) Password Card Mechanical key Gateway(option)	Data Capacity	Fingerprint：200 Password：150 Card：200
Color	Silver Black	Working Temperature	-10℃-55℃
Low Wattage Alarm	Less than 4.8V	Working Humidity	0-95%

1.4.System Initialization

Open the cover plate of the front panel ,long press the "Reset" button on the back panel for 5s, press "000#",and the initialization is complete

1.5.Electronic Locking Button

Locked

Unlock

1.If you want to have the Electronic Locking function, first turn on "privacy lock" on the app

2.When the button is in the red state, it is in the locked state and can only be unlocked through the administrator app or mechanical key.

2.Installation

2.1Turn the handle

Notice: *Adjust the handle according to the direction you open the door.*

For Front Panel:

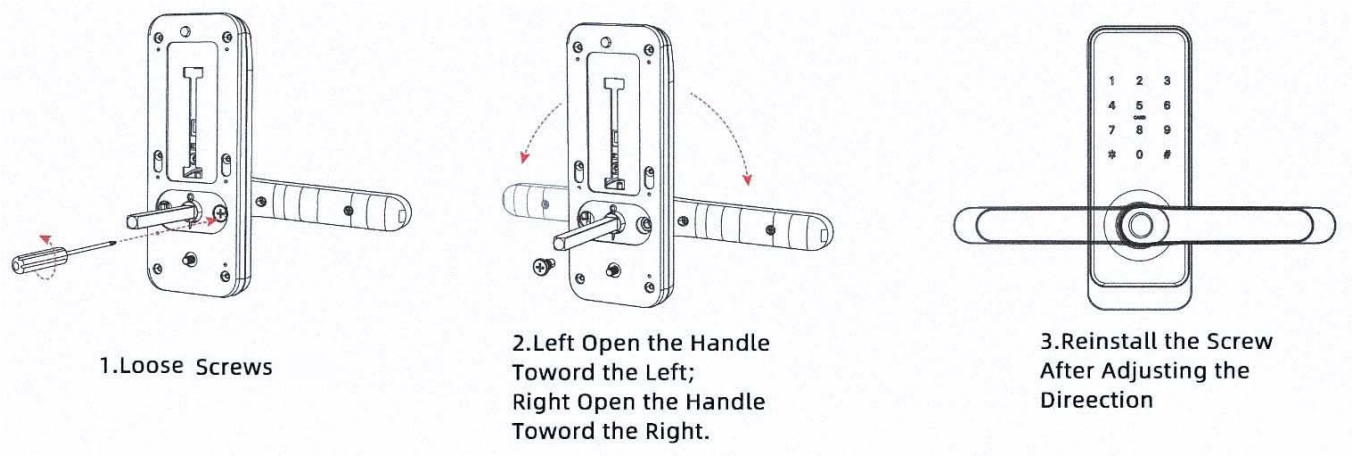

For Back Panel:

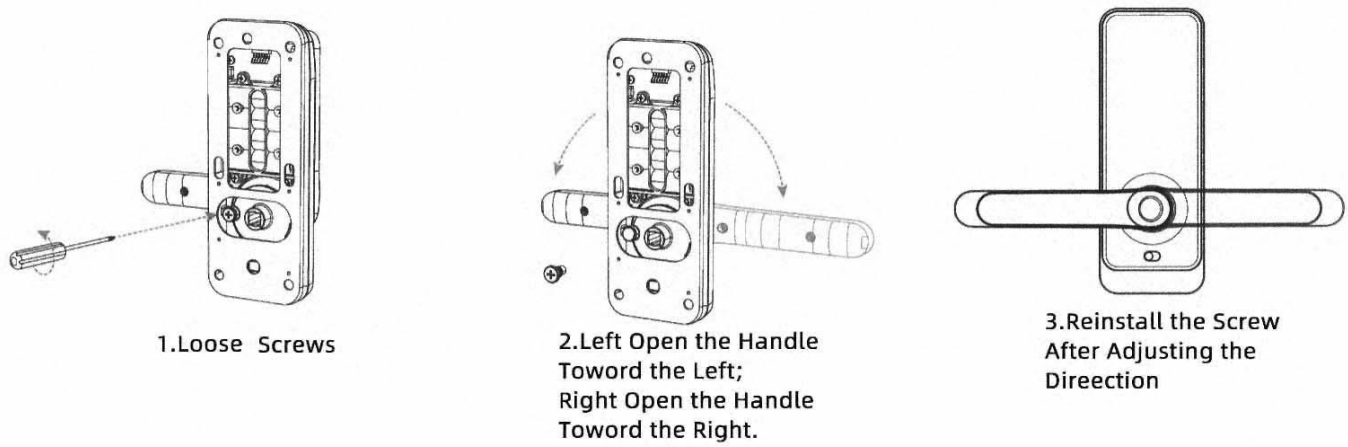

2.2. Installation Diagram(For Latch)

Step 1 Install Mortise	Step 2 Install Sliding Screw Casing
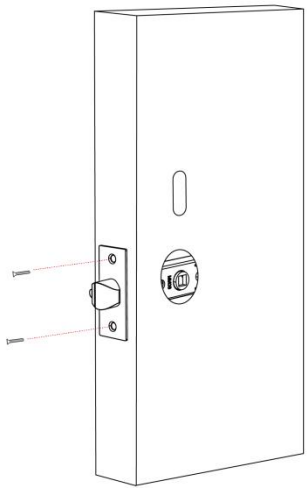	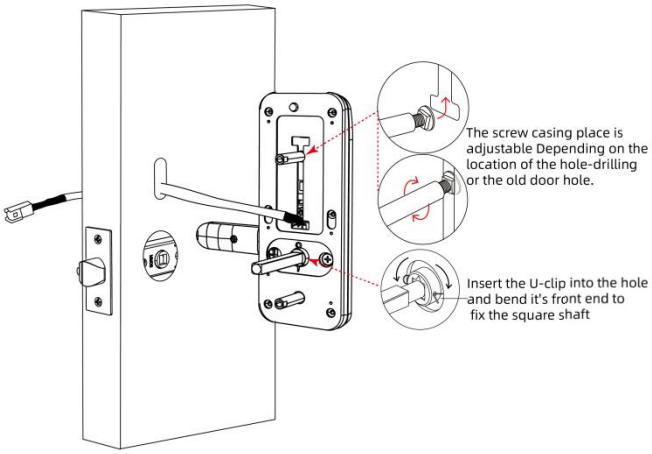
Step 3 Install back gasket	**Step 4 Install Back Panel and link wire**
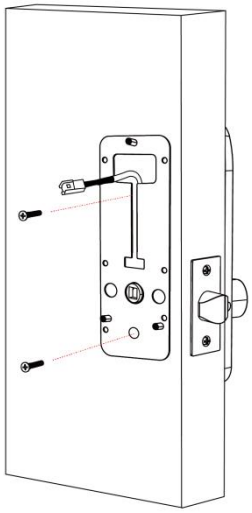	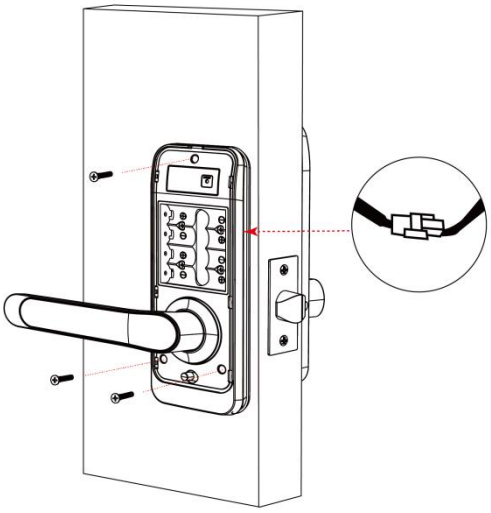
Step 5 Install battery and back cover	**Step 6 installation complete**
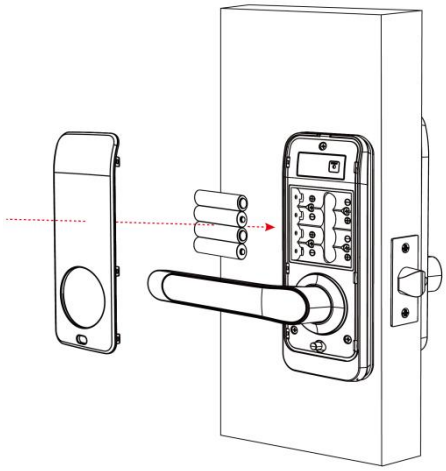	

3.Operation

3.1.Registration

The software (iOS version) can be downloaded from the app store, and the Android version can be downloaded from the application store of Google play, Yingyongbao, Baidu, Ali, 360, Huawei, and Xiaomi.

3.2. Connect lock to the phone

1) please scan the QR code to download the app

2) You can also search for TTLock in the APP store(Google Play)to download

4) Register a new account (phone number or email) or login with an existing account.

5) Touch the lock screen to light, click "+ Add Lock"

6) The lock nearby will appear on the phone screen, Click "+"

7) Re-name the lock

8) The lock added successfully

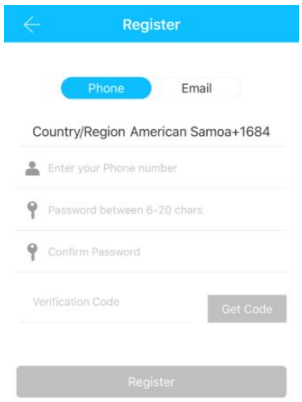

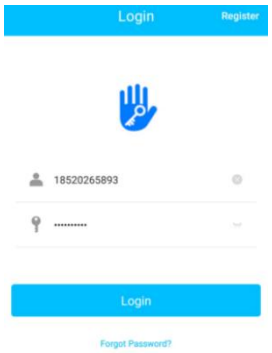

TTlock users can register the account by mobile phone and Email which currently support 200 countries and regions on the world. The verification code will be sent to user's mobile phone or email, and the registration will be successful after the verification.

3.3.Add locks

TTLock supports multiple types of lock devices. The lock needs to be added by the app after entering the add mode. Generally, a lock that has not been added, as long as the lock keyboard is touched, it will enter the add mode. The default password is 123456 if not added by the phone

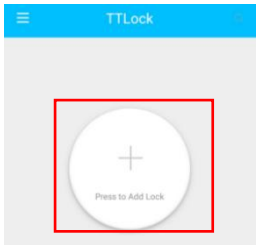

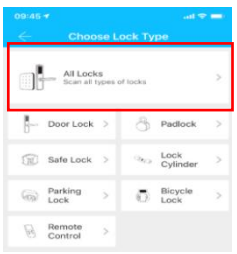

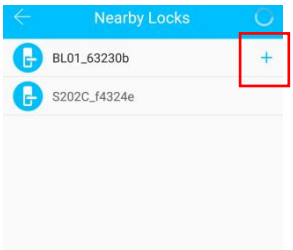

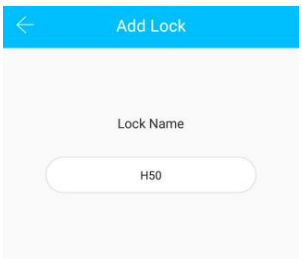

3.4.User Management

3.4.1. Bluetooth management

Make sure there is no problem with Bluetooth communication. After connecting the phone to the door lock as above, Click " "to unlock.(the phone is within 5meters from the door lock)

3.4.2. Setting Passcode

Passcodes are also a way to unlock. After entering the passcode on the locked keyboard, press the unlock button in the lower right corner to unlock. Passcodes are divided into permanent, time-limited, single, clear, cycle, and custom.(You can share the Passcode to other user via WeChat、SMS、Email、Messenger、WhatsApp)

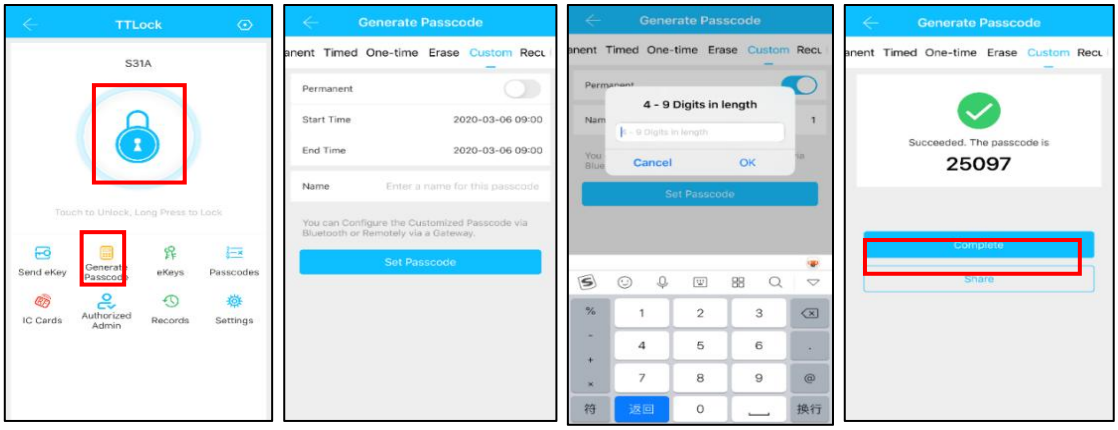

3.4.3. Send e-Key

Click on the " Send eKey " as shown in figure, you can send the eKey to other users of TTlock to authorize the unlock(the receiver must be download the APP and set up an account)→ Select e-key format (Timed, permanent, One-time, Recurring) → Enter recipient's account of TTlock,set the name and effective time of the eKey, Can choose to allow remote unlocking or disallowing, authorized administrator or not authorized, as shown in figure →Send→The recipient's account has Bluetooth unlock permission

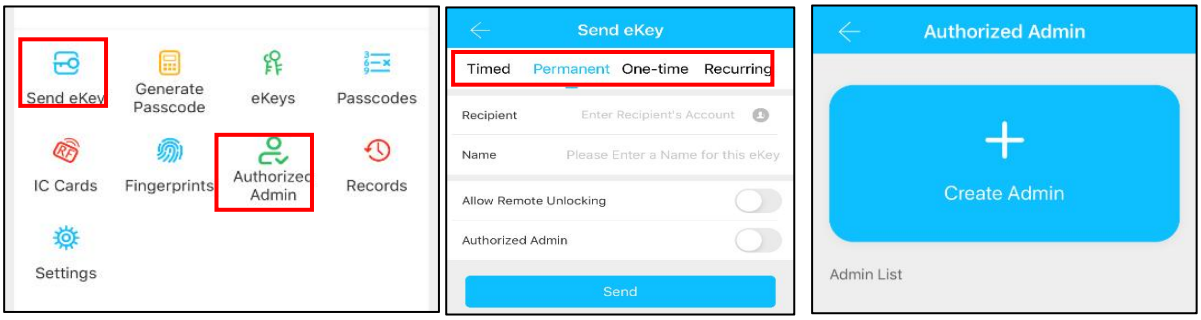

3.4.4.Add card

Supports opening doors through various IC cards. Before an IC card is used to open the door, it needs to be added first. The adding process needs to be performed by the app beside the lock.The validity period of the IC can be set, it can be permanent, or it can be limited in time.

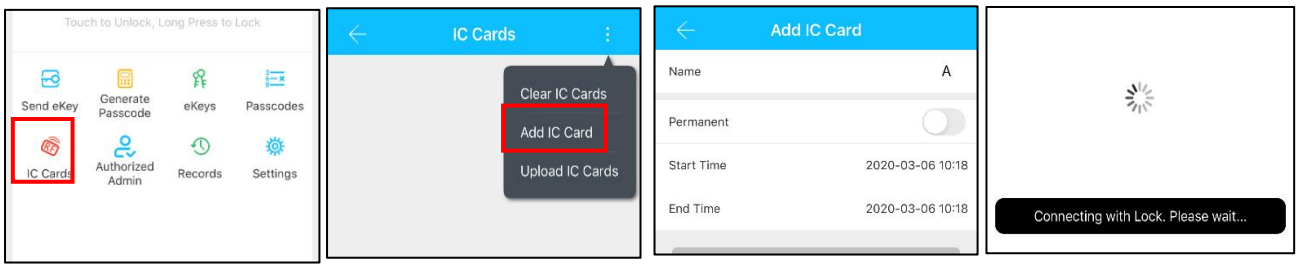

3.4.5. Add fingerprint

The premise that a fingerprint can be used to open a door is that it needs to be added first. The adding process needs to be performed by the APP beside the lock. The fingerprint expiration data can be set, it can be permanent, or it can be limited. After setting ,you can modify its validity period.

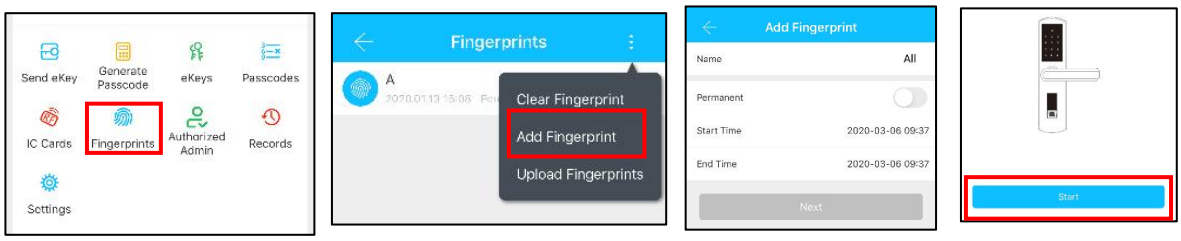

3.4.6. e-Key management

Click " eKeys " The manager can delete ekey, reset ekey, send and adjust the ekey, meanwhile he can search the lock record.

3.4.7. Passcode management

Click " Passcodes All generated passwords can be viewed and managed in the password management module. This includes a password change, password deletion, password reset, and password unlock record.

3.4.8.Unlock records

Click " Records "you can query your unlock record as shown in figure

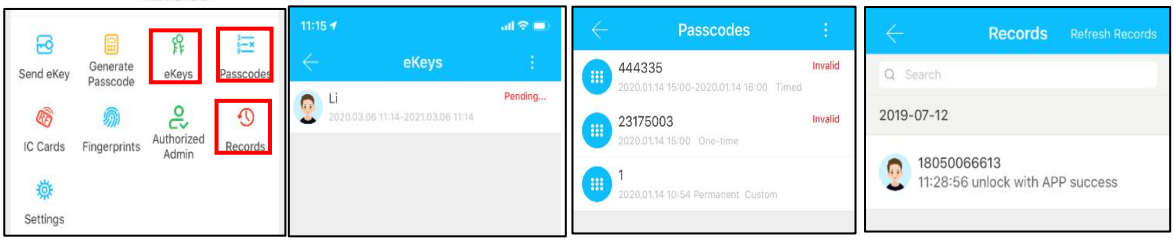

3.5. Gateway management(Optional)

The TT lock is directly connected via Bluetooth, that is why it is not attacked by the network. The gateway is a bridge between smart locks and home WIFI networks. Through the gateway, the user can remotely view and calibrate the lock clock, read the unlock record. Meanwhile, it can remotely delete and modify the password.

3.5.1. Add Gateway

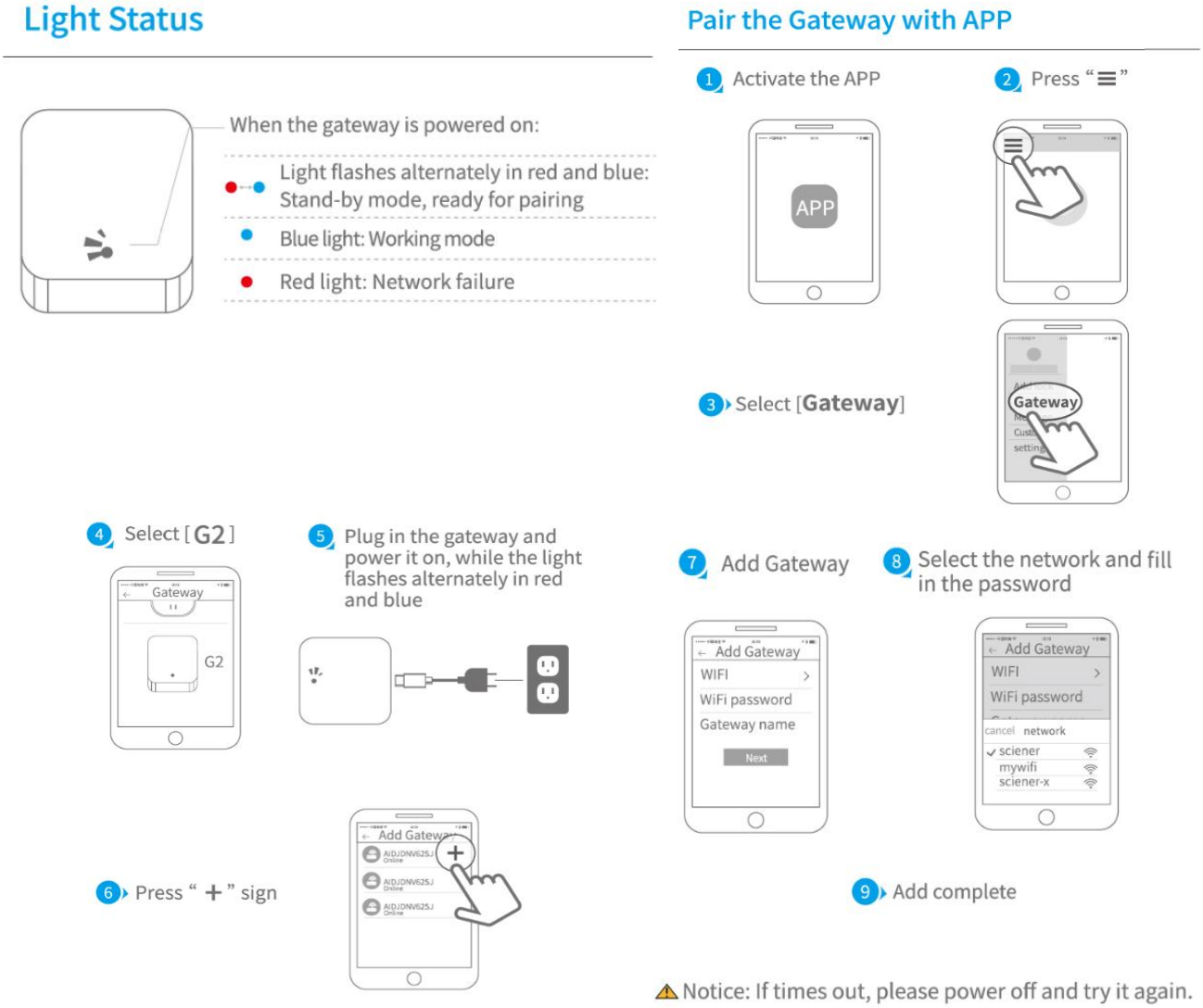

3.5.2. Manual

After a short period of time, you can see which locks are in their coverage in the app. Once the lock is bound to the gateway, the lock can be managed through the gateway

4.FAQ

1) How to read operation records?	In the Records of the main interface. .
2) Why can't I unlock it after open the passage mode	You need to perform an unlock verification in any method, than the passage mode will take effect.
3) What is the purpose of Auto Lock	You can set how long to lock after unlocking
4）After installation, touch sensing keyboard, screen no respond	a) In this case, first check that the positive and negative electrodes of the battery have been installed upside down, whether the battery has enough power b) Remove the back panel and see if it's connected. c) To eliminate the above situation, you need to remove the lock ,check whether the wires of the lock body are squeezed, and the re-wire.
5）Unable to register fingerprint	Check the fingers for dirt or wear, check the fingerprint head on the lock for dirt and oil stains, etc. Check to see if the fingerprint is working properly(Press to see if there is any responds.
6）What is the reason why the smart lock consumes fast power?	a) Large standby power consumption b) Short circuit
7）There is no response to pressing the handle on outside the door, and there is unlock normally on inside the door, but the verification is normal, and the motor is normal.	It may be the triangle direction on the clutch was error, please check correction.
8）How many times will the password be locked? How long is it locked?	Enter the wrong password more than 5 times in a row, the keyboard is locked for 5 minus, Other ways to can open the door

Guarantee

Customer Name：_____

Customer Calls ：_____

Purchase Date ：_____

Product Name ：_____

Product Model ：_____

Note:

① *Please keep this card so that you can use it when you need warranty service.*

② *We provide you with a one-year warranty from the date of purchase.*

③ *This warranty service is valid for customers in any country in the world.*