Smart Lock

User Manual

R02-TB

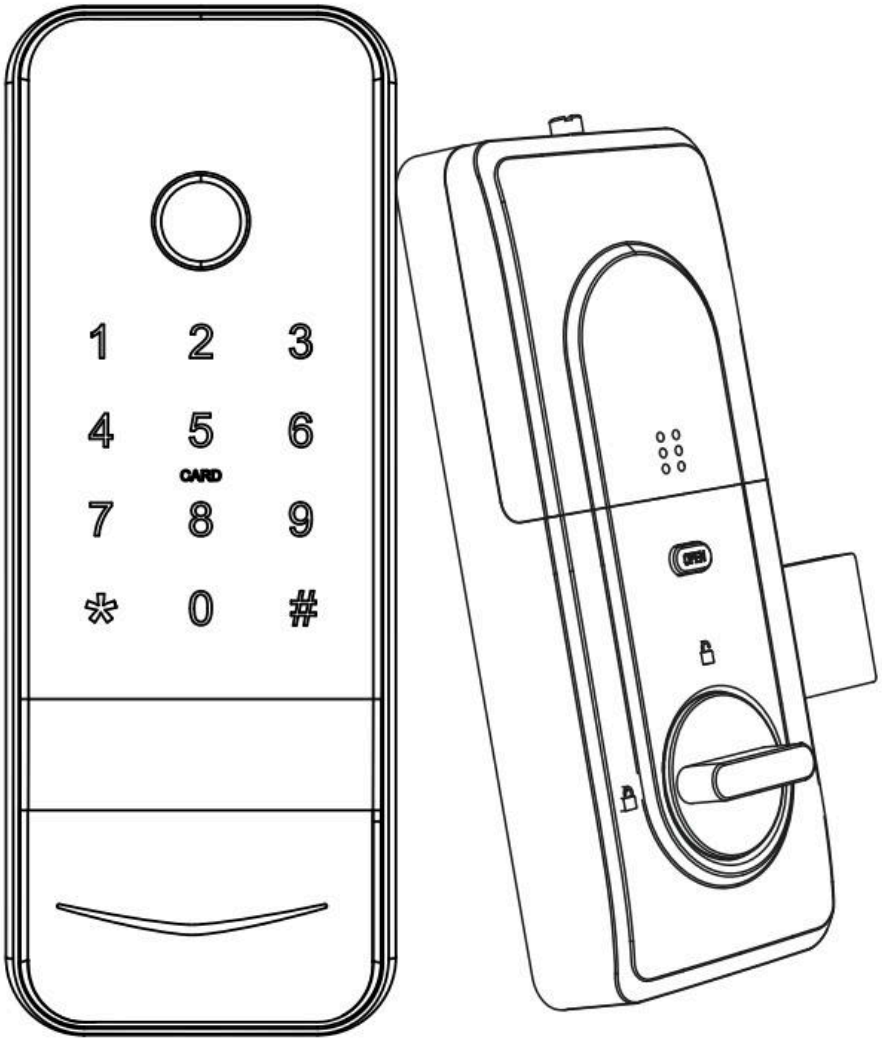

Special Attention:

1. Mechanical keys please keep outdoor, just in case keys lock in doors.

2. Please replace for the battery when low wattage alarm.

3. Reading this manual carefully before installation, and keep it for future reference.

1.Introduction

1.1.Lock structure

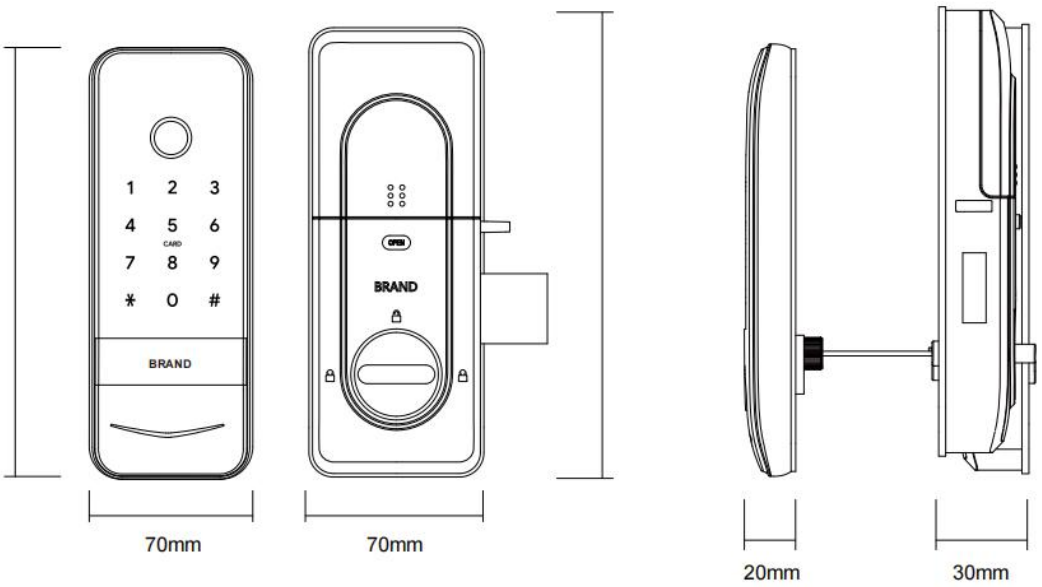

1.2.Packing List

Check the following drawing to check whether the package contains all the parts.

NO	Name	Qty		NO	Name	Qty
1	Front Panel	1		8	Pin	1
2	Back Panel	1		9	Mortise Screws:M4*20mm	4
3	Card	3		10	M4*20mm Screw	4
4	Mechanical Key	2		11	KM4*8mm Screw	3
5	Waterproof Rubber Plate	1		12	M5*45mm Screw	2
6	Strike&Strike Box	1+1		13	M5*60mm Screw	2
7	User Manual	1		14	KM5*100mm Screw	2

1.3.Specifications

Suitable for Models	R02-TB	Doors Applicable	Aluminum door Wooden door
Materials	Aluminum alloy	Working Voltage	6V/4x AA Batteries
Lock Weight	2KG	Door Thickness to Fit	45-55mm
Unlocking Way	Bluetooth Fingerprint(option) Password Card Mechanical key Gateway(option)	Data Capacity	Fingerprint：200 Password：150 Card：200
Color	Silver/Black	Working Temperature	-10°C-55°C
Low Wattage Alarm	Less than 4.8V	Working Humidity	0-95%

2.Installation Diagram

Step 1 Install Exterior Assembly

Install the waterproof rubber plate to exterior assembly.

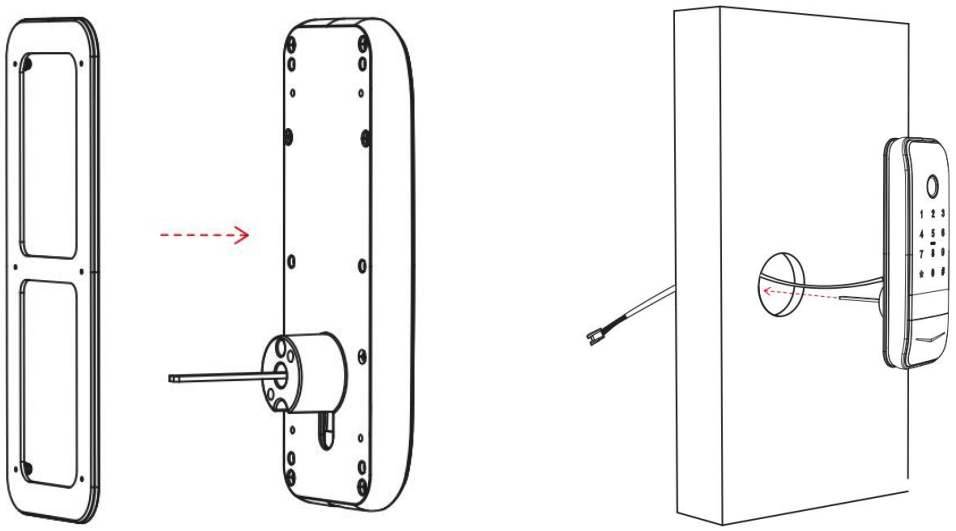

Step 2 Install Strike Box

1.Install the strike and strike box into the door with 2 screws.

2.Install the fixing plate into the door with 2 screws.

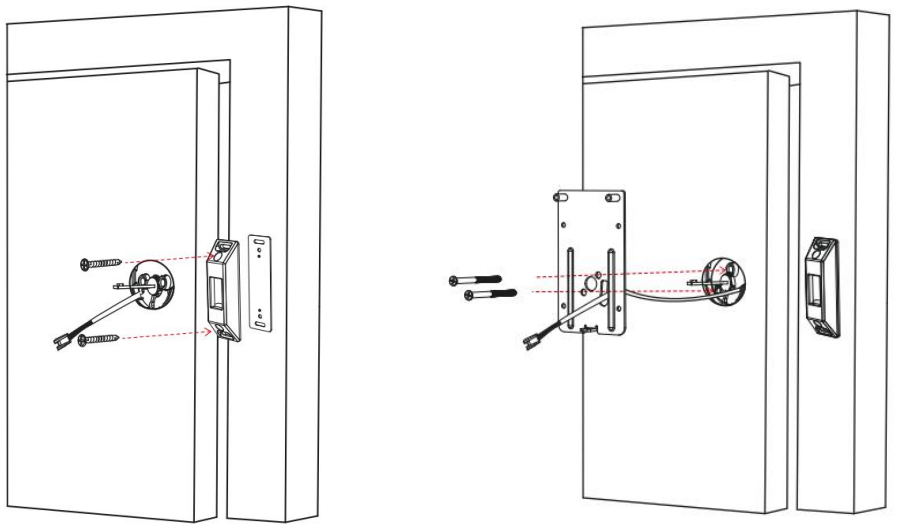

Step 3 Install Interior Assembly

1.Loosing the Battery cover.

2. Connect the wire.

3.Fix Exterior Assembly and Interior Assembly with screws.

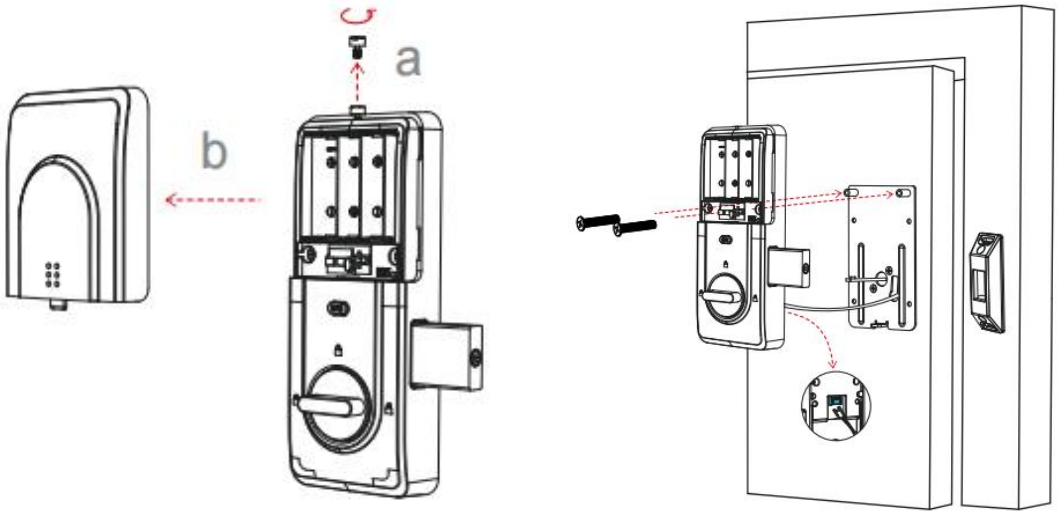

Step 4 Install batteries

1. Insert battery. 2. Install the battery cover. 3. Complete Installation .

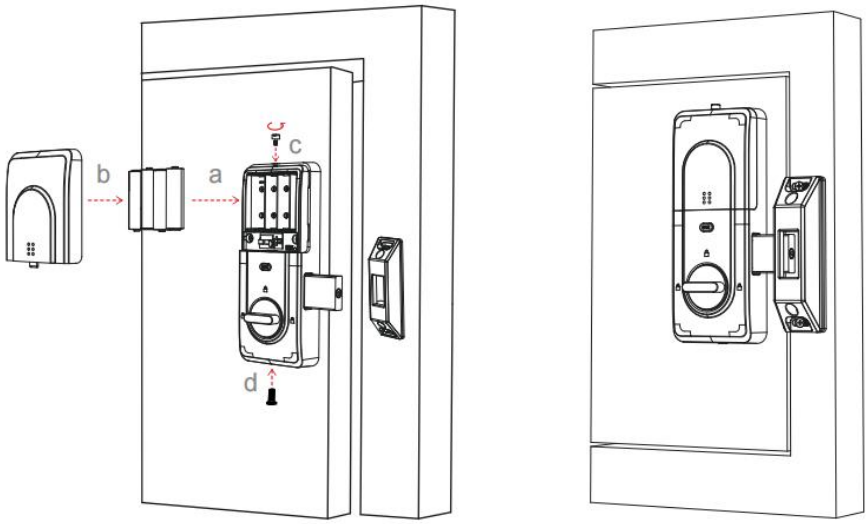

3.Initialization Mode

3.1 Initialization Button

Note:Please note all date will be erased if you reset your lock to factory default.All entered fingerprint, password, and other data will be cleared.

1. Open the cover plate of the back panel.
2. Long press the reset button until the voice prompt "Please enter initialization password".
3. Release the reset button, and then enter "000#".

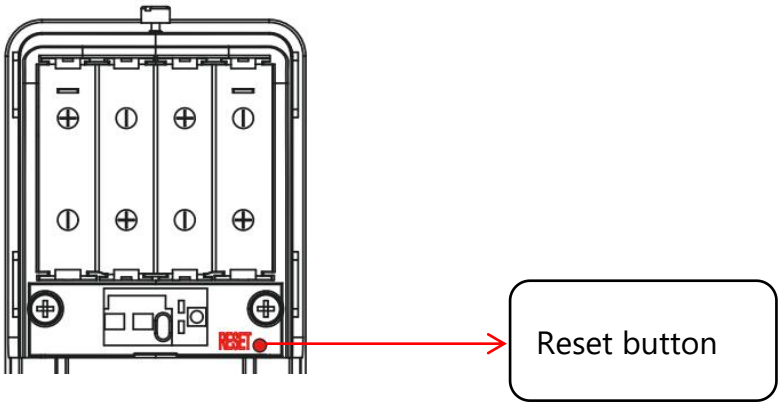

3.2 Electronic Locking Button

1.Press 'open' swtich is the lock, and then press again to unlock.

2.Knob switch will be unlocked, the opposite direction rotation is locked.

Switch

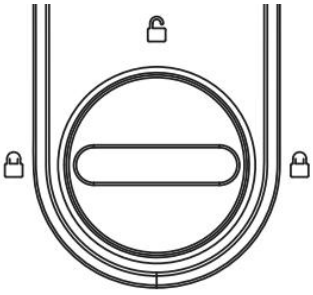

Lock

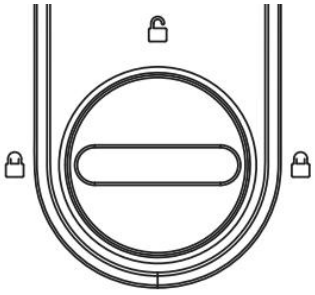

Unlock

4.Operation

4.1. Registration

The software (iOS version) can be downloaded from the app store, and the Android version can be downloaded from the application store of Google play.

4.2. Connect lock to the phone

1. Please scan the QR code to download the app.
2. You can also search for TTLock in the APP store(Google Play)to download.
3. Register a new account (phone number or email) or login with an existing account.
4. Touch the lock screen to light, click "+ Add Lock".
5. The lock nearby will appear on the phone screen, Click "+".
6. Re-name the lock.
7. The lock added successfully.

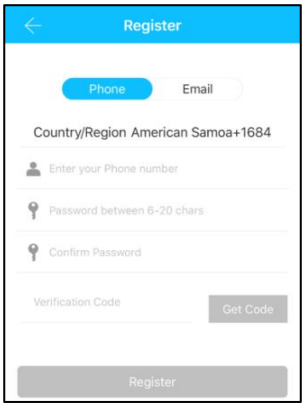

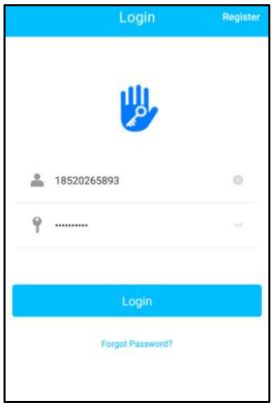

TTlock users can register the account by mobile phone and Email which currently support 200 countries and regions on the world. The verification code will be sent to user's mobile phone or email, and the registration will be successful after the verification.

4.3. Add locks

TTLock supports multiple types of lock devices. The lock needs to be added by the app after entering the add mode. Generally, a lock that has not been added, as long as the lock keyboard is touched, it will enter the add mode. The default password is 123456 if not added by the phone.

Note: If the lock cannot be added in the above steps, please close the mobile app and Bluetooth, reopen the app and Bluetooth, and repeat the steps to add the lock.

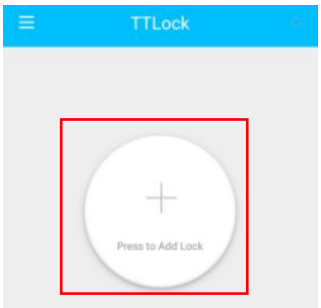

①

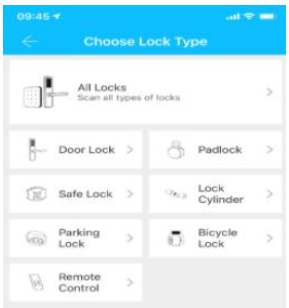

②

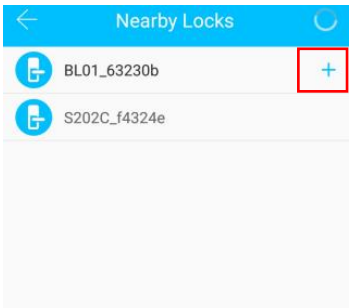

③

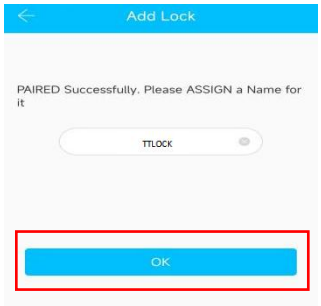

④

4.4. User Management

4.4.1. Bluetooth management

Make sure there is no problem with Bluetooth communication. After connecting the phone to the door lock as above, Click " "to unlock.(the phone is within 5meters from the door lock).

4.4.2. Setting Passcode

Passcodes are also a way to unlock. After entering the passcode on the locked keyboard, press the unlock button in the lower right corner to unlock. Passcodes are divided into permanent, timed, one-time, custom, recurring, and erase.(You can share the Passcode to other user via SMS、Email、Messenger、Whatsapp）.

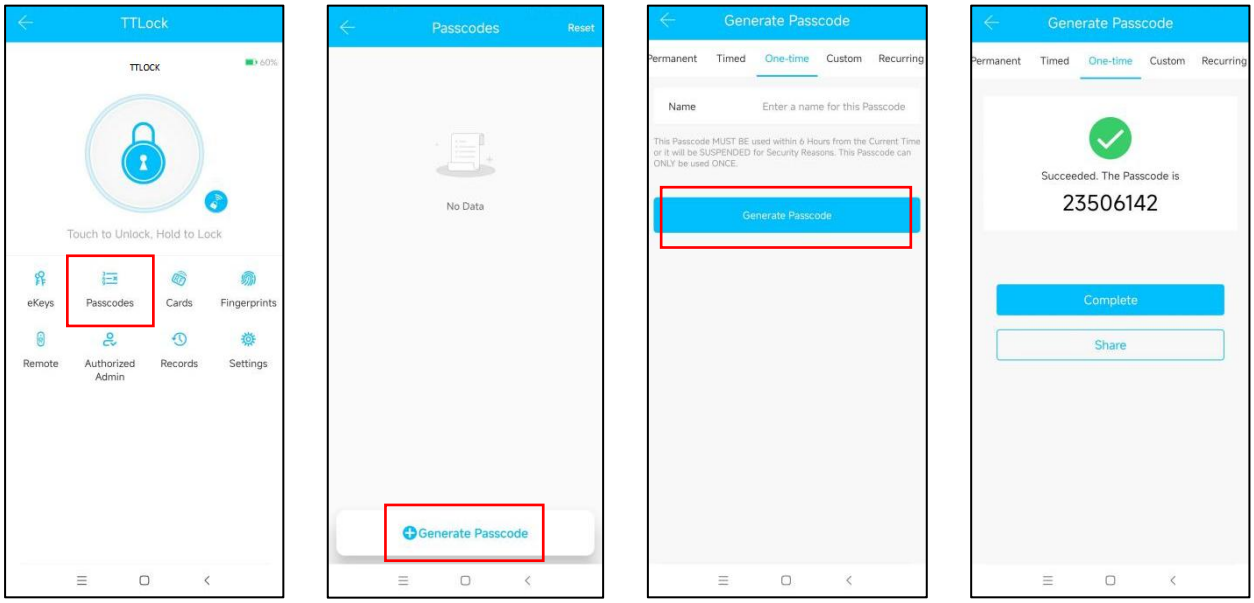

① ② ③ ④

4.4.3. Add card

Supports opening doors through various IC cards. Before an IC card is used to open the door, it needs to be added first. The adding process needs to be performed by the app b eside the lock.The validity period of the IC can be set, it can be permanent, timed or recurring.

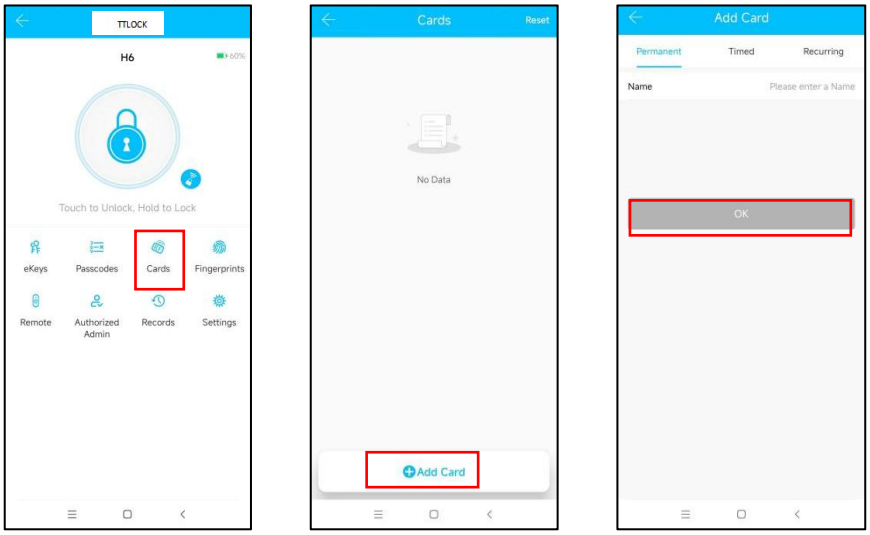

① ② ③

4.4.4. Add fingerprint

The premise that a fingerprint can be used to open a door is that it needs to be added first. The adding process needs to be performed by the APP beside the lock. The fingerprint expiration data can be set, it can be permanent, timed or recurring. After setting ,you can modify its validity period.

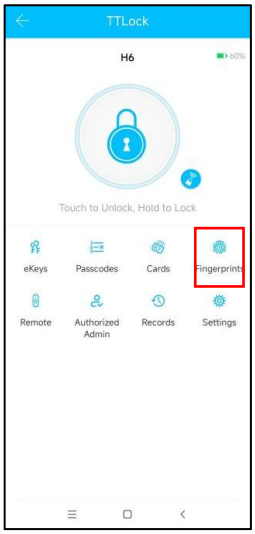

①

②

③

4.4.5. Send e-Key

Click on the " " as shown in figure, you can send the eKey to other users of TTlock to authorize the unlock(the receiver must be download the APP and set up an account)→ Select e-key format (Timed, permanent, One-time, Recurring) → Enter recipient's account of TTlock,set the name and effective time of the eKey, Can choose to allow remote unlocking or disallowing, authorized administrator or not authorized, as shown in figure →Send→The recipient's account has Bluetooth unlock permission.

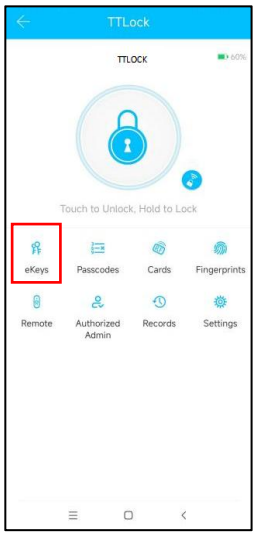

①

②

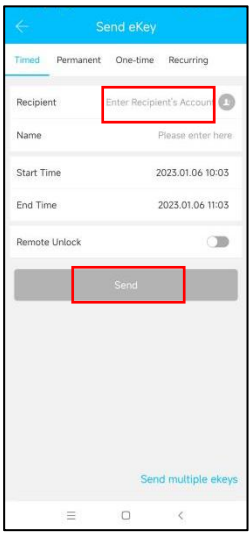

③

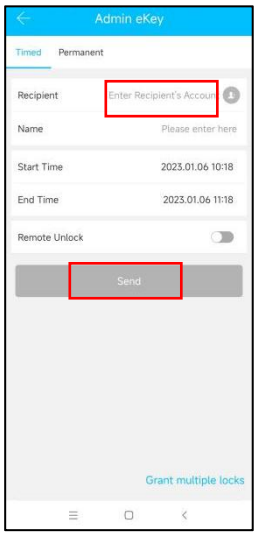

④

4.4.6. e-Key management

Click " eKeys The manager can delete ekey, reset ekey, send and adjust the ekey, meanwhile he can search the lock record.

4.4.7. Passcode management

Click " Passcodes .All generated passwords can be viewed and managed in the password management module. This includes a password change, password deletion, password reset, and password unlock record.

4.4.8. Unlock records

Click " Records "you can query your unlock record as shown in figure.

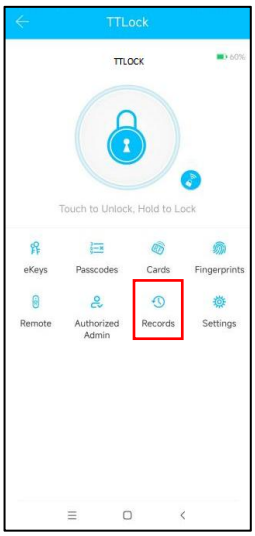

①

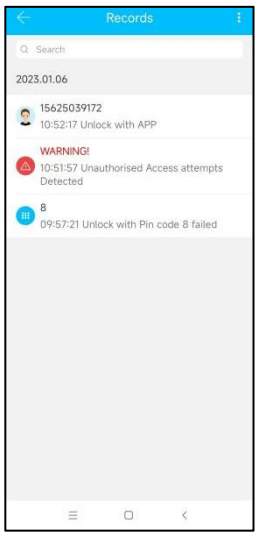

②

5. Gateway (Optional)

The TT lock is directly connected via Bluetooth, that is why it is not attacked by the network. The gateway is a bridge between smart locks and home WIFI networks. Through the gateway, the user can remotely view and calibrate the lock clock, read the unlock record. Meanwhile, it can remotely delete and modify the password.

5.1. Add Gateway

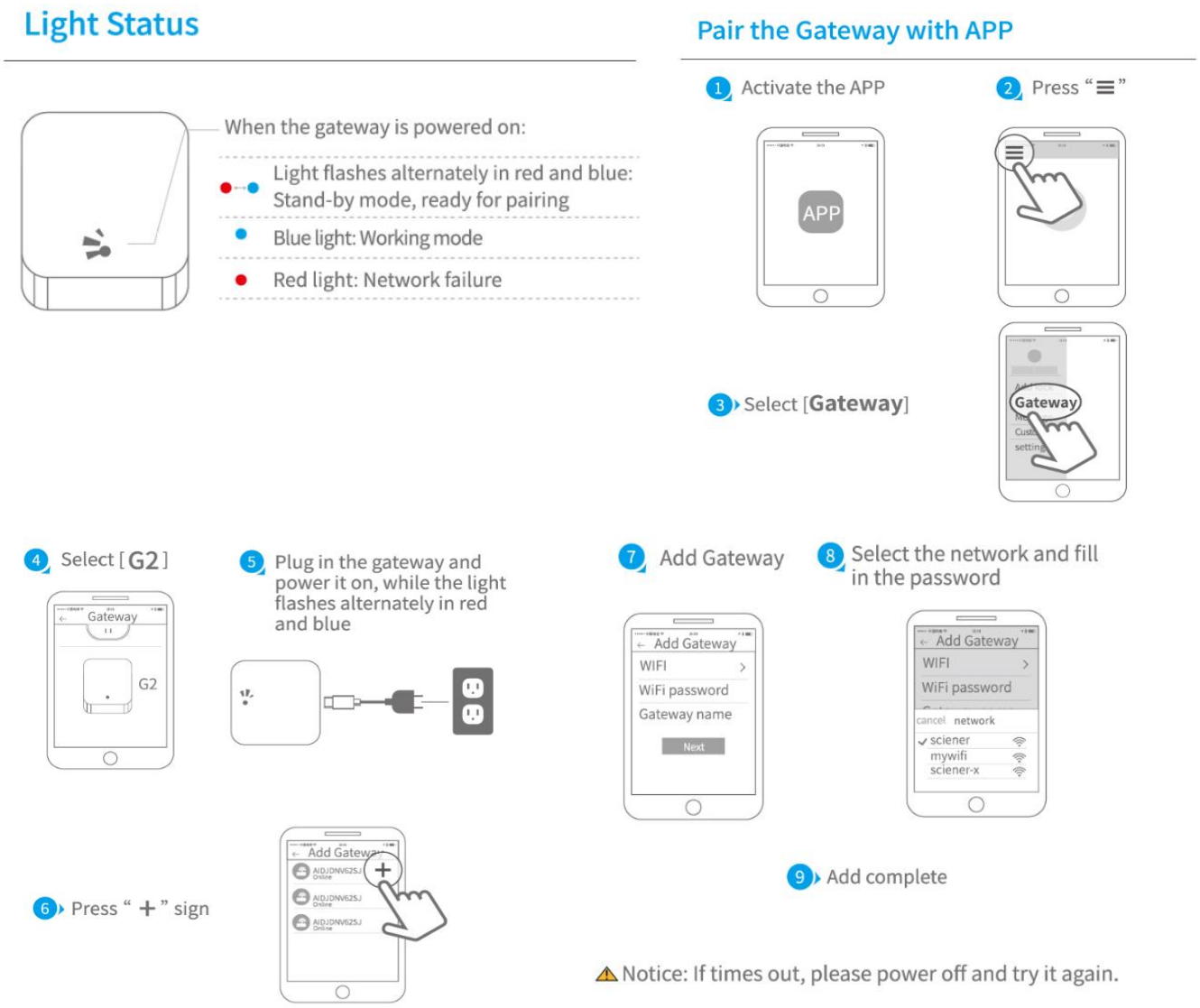

5.2. Manual

After a short period of time, you can see which locks are in their coverage in the app. Once the lock is bound to the gateway, the lock can be managed through the gateway.

6. FAQ

1. How to read operation records?	In the Records of the main interface.
1. Why can't I unlock it after open the passage mode?	You need to perform an unlock verification in any method, than the passage mode will take effect.
2. What is the purpose of Auto Lock?	You can set how long to lock after unlocking.
3. After installation, touch sensing keyboard, screen no respond	a) In this case, first check that the positive and negative electrodes of the battery have been installed upside down, whether the battery has enough power b) Remove the back panel and see if it's connected. c) To eliminate the above situation, you need to remove the lock ,check whether the wires of the lock body are squeezed, and the re-wire.
4. Unable to register fingerprint	Check the fingers for dirt or wear, check the fingerprint head on the lock for dirt and oil stains, etc. Check to see if the fingerprint is working properly(Press to see if there is any responds.
5. What is the reason why the smart lock consumes fast power?	a) Large standby power consumption. b) Short circuit.
6. There is no response to pressing the handle on outside the door, and there is unlock normally on inside the door, but the verification is normal, and the motor is normal.	It may be the triangle direction on the clutch was error, please check correction.
7. How many times will the password be locked? How long is it locked?	Enter the wrong password more than 5 times in a row, the keyboard is locked for 90 seconds.

Guarantee

Customer Name：_____

Customer Calls ：_____

Purchase Date ：_____

Product Name ：_____

Product Model ：_____

Note:

1) Please keep this card so that you can use it when you need warranty service.

2) We provide you with a one-year warranty from the date of purchase.

3) This warranty service is valid for customers in any country in the world.